2/2-way valves DN 8 to DN 25

for hot water and steam
Indirectly solenoid actuated
Diaphragm valves
Internal threads G 1/4 to G 1
Operating pressure 0.1 to 10 bar

82470

Click-on®

Description (standard valve)

Solenoid valve for hot water and steam

Switching function:	Normally closed
Flow direction:	determined
Fluid temperature:	max. +150 °C
Ambient temperature:	max. +60 °C
Mounting position:	optional, preferably solenoid vertical on top

Material

Body:	Brass
Seat seal:	HNBR
Internal parts:	Stainless steel, brass

For contaminated fluids insertion of a strainer is recommended (see accessories).

Features

- High flow rate
- Damped operation
- Clear compact design
- Solenoid interchangeable without tools (Click-on®)
- Especially qualification as water valve to DIN EN 60730-2-8

EC type examination up to ND 25

acc. to DIN EN 60730-2-8
Solenoid Valves
Test laboratory
TÜV Rheinland / Brandenburg

Type tested 2/2 Solenoid Valve
TÜV PROOF
Voluntary Examination according to DIN EN 60730-2-8
File No.: 931-980446

Symbol

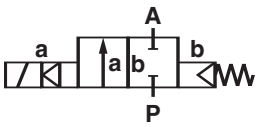

Ordering information

To order, quote model number from table overleaf, e.g. 8247000.9101 for a G 1/4 valve with standard solenoid.

Characteristic data

See page 2 valve and solenoid informations

Detmolder Strasse 256
D-32545 Bad Oeynhausen

PO Box 10 02 52-53
D-32502 Bad Oeynhausen

Phone ++49 5731 / 7 91-0
Fax ++49 5731 / 791-179

http://www.buschjost.com
mail@buschjost.de

Characteristic data

Valves

Part Number with DC or AC solenoid	Nominal Diameter (mm)	Port size	Valve length (mm)	Operating Pressure * min	max (bar)	kv-value ** (Base m³/h)	Weight (kg)
8247000.9101	8	G 1/4	60	0.1	10	1.70	0.47
8247100.9101	10	G 3/8	60	0.1	10	2.70	0.45
8247200.9101	12	G 1/2	67	0.1	10	3.40	0.50
8247300.9101	20	G 3/4	80	0.1	10	5.50	0.65
8247400.9101	25	G 1	95	0.1	10	8.50	0.95

* with gaseous and liquid fluids up to 25 mm²/s (cSt)
** C_V-value (US) ≈ k_V-value x 1.2

State voltage [V] and frequency [Hz

9101 Solenoid

Standard voltages

DC	AC 50 Hz	AC 60 Hz
24 V	24 V	–
–	110 V	120 V
205 V	230 V	220 V

Design acc. to DIN VDE 0580
Voltage range ±10 %
100 % duty cycle
Protection class acc. to EN 60529 IP65
Socket acc. to DIN EN 175301-803 (included)

Power Consumption

According to DIN VDE 0580 at coil temperature +20 °C. In operating the solenoid coil decrease the power consumption appr. 30 %.

DC	AC Inrush	AC Holding
8 W	15 VA	12 VA / 7 W

For technical details see catalog-register "Solenoids"

Options (Valves)

XXXXX**01.**XXXX Normally open (NO)

On request Further versions

Section View

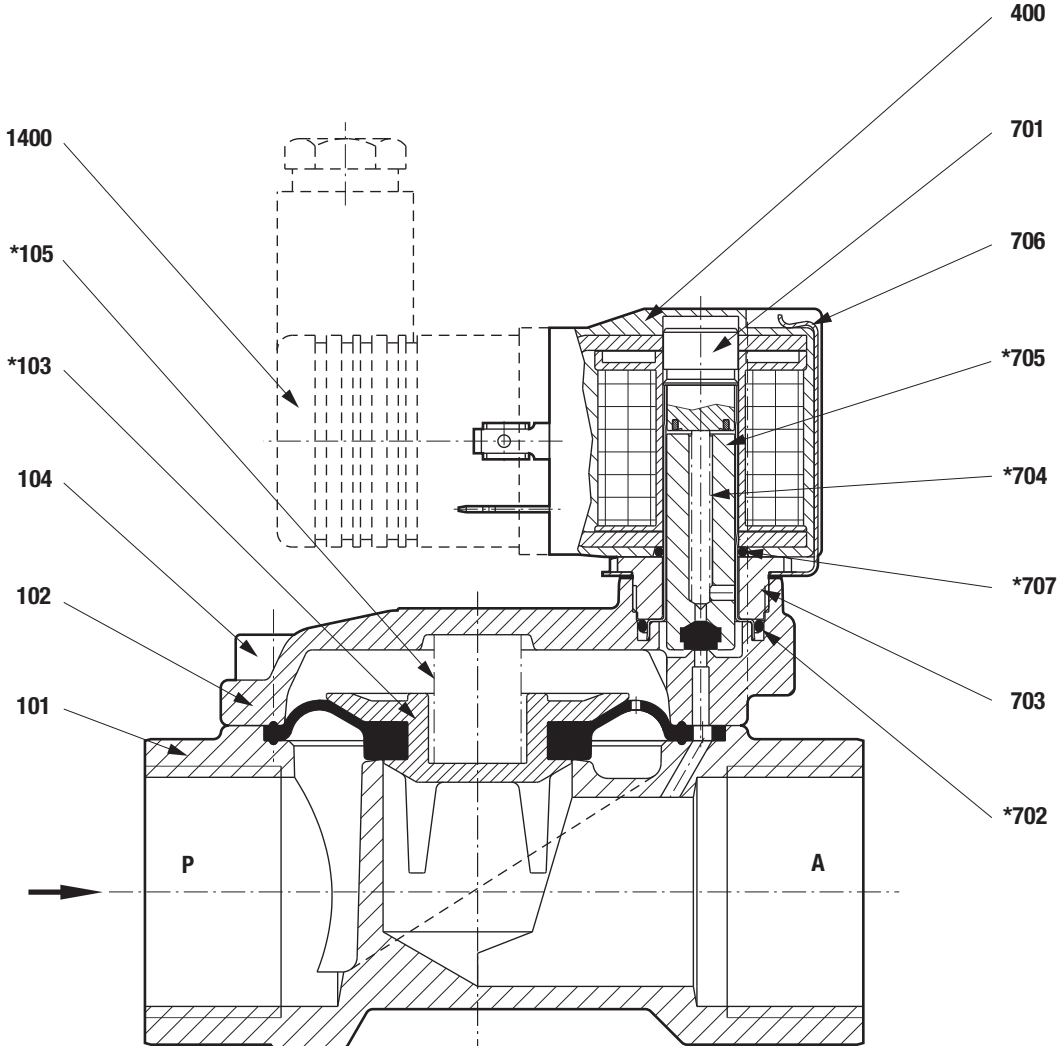

101	Valve body
102	Valve cover
*103	Diaphragm
104	Socket head cap screw
*105	Pressure spring
400	Solenoid
701	Core tube
*702	O-ring
703	Screw piece
*704	Pressure spring
*705	Core
706	Spring clip
*707	O-ring
1400	Socket (included)

* These individual parts form a complete wearing unit.
When ordering spare parts please state Cat no and series no.

General Dimensions

Solenoid rotatable 360°
Socket turnable 4 x 90°
(Socket included)

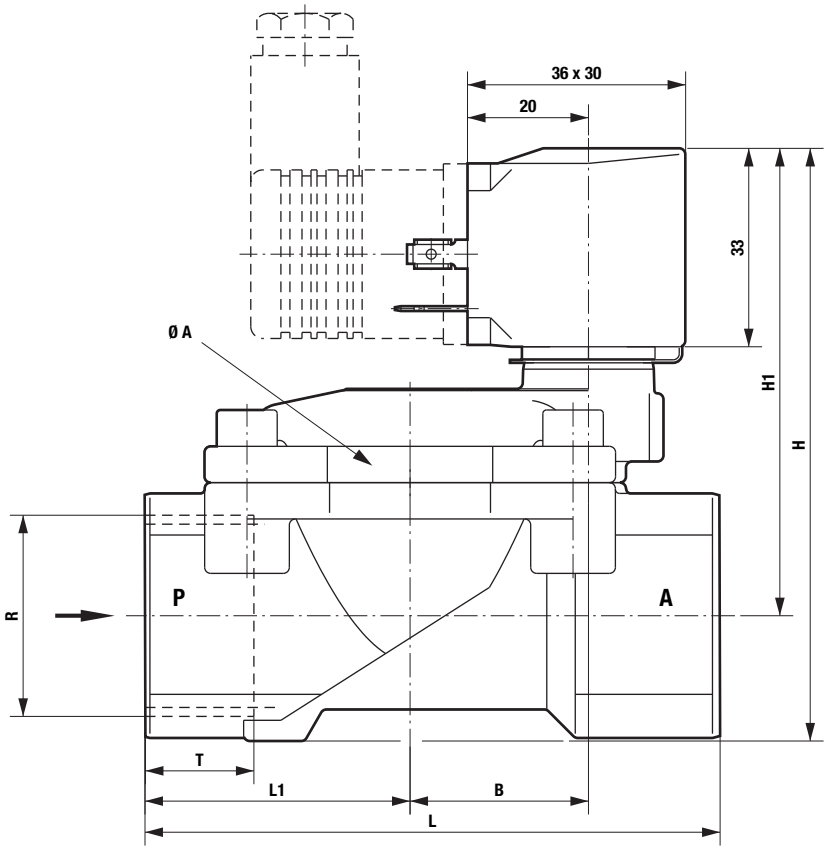

Part Number	Ø A	B	H	H1	L	L1	R	T
8247000.9101	44	19.5	78.5	67	60	27.5	G 1/4	12.0
8247100.9101	44	19.5	78.5	67	60	27.5	G 3/8	12.0
8247200.9101	44	19.5	81.0	67	67	31.0	G 1/2	14.0
8247300.9101	50	24.0	88.0	71.5	80	36.5	G 3/4	16.0
8247400.9101	62	29.5	97.5	77	95	44.0	G 1	18.0

Note to Pressure Equipment Directive (PED):
The valves of this series are according to Art. 3 § 3 of the Pressure Equipment Directive (PED) 97/23/EG.
This means interpretation and production are in accordance to engineers practice wellknown in the member countries.
The CE-sign at the valve does not refer to the PED. Thus the declaration of conformity is not longer applicable for this directive.

Note to Electromagnetic Compatibility Guideline (EEC):
The valves shall be provided with an electrical circuit which ensures the limits of the harmonised standards EN 50081-1 and EN 50082-1 are observed, and hence the requirements of the Electromagnetic Compatibility Guideline (89/336/EEC) satisfield.